Electrolux PROFESSIONAL

Standard Preparation 2000 mm Ventilated Hot Cupboard with Shelf & Sliding Doors

ITEM #

MODEL #

NAME #

SIS #

AIA #

132790 (MTC2000PN) Hot Cupboard with 1 shelf and 2 sliding doors, ventilated, 2000mm

Short Form Specification

Item No.

Made entirely from stainless steel. Inner welded frame in stainless steel. Unique connection of panels to inner frame. The 50mm high worktop in 304 AISI stainless steel, 1mm in thickness, incorporates a layer of sound deadening material and has upturned edges. Sound-deadened sliding doors. Base panel in 304 AISI stainless steel and height-adjustable intermediate shelf. Mounted on feet, adjustable in height. Ventilated hot air flow system guarantees temperature evenness, air flows underneath the intermediate shelf and throughout the cabinet. Thermostat with digital display to adjust the internal temperature (up to 75°C).

APPROVAL:

Main Features

- Ideal for central positioning in the kitchen, either as island installation or back to back.
- Digital display thermostat to control the internal temperature.
- Model specific to keep dishes warm.
- Handles in stainless steel for better hygiene and reliability.
- Sturdiness, stability and reliability of table accurately tested.

Construction

- Inner welded frame in stainless steel to guarantee superior strength and stability.
- Easy access to the cupboard interior on all lengths guaranteed by the use of only 2 doors.
- 50 mm worktop in 304 AISI stainless steel with upturned edges, incorporates an 18 mm layer of sound deadening material.
- Reinforced side and base panel in 304 AISI stainless steel.
- Equipped with intermediate shelf which can be positioned at three different heights.
- Sturdy sound-deadened sliding doors on tracks located flush to the front of the frame.
- Intermediate shelf in stainless steel with riveted corners and trasversal reinforcement in stainless steel.
- 100 mm upstand with 10 mm radioused corner and 13 mm deep, designed to be used against a wall.
- Base panel has 40mm high profile, is 8/10 in thickness with upturned edges and bar reinforcement. It is welded to legs for further structure reinforcement.
- 304 AISI stainless steel feet, 150 mm high and 54 mm in diameter, adjustable by -35/+25 mm.

Optional Accessories

- Wheel kit for cupboards, 4 wheels (2 with brakes), D=100 mm — PNC 855299 ❑

Standard Preparation
2000 mm Ventilated Hot Cupboard with Shelf & Sliding Doors

Front

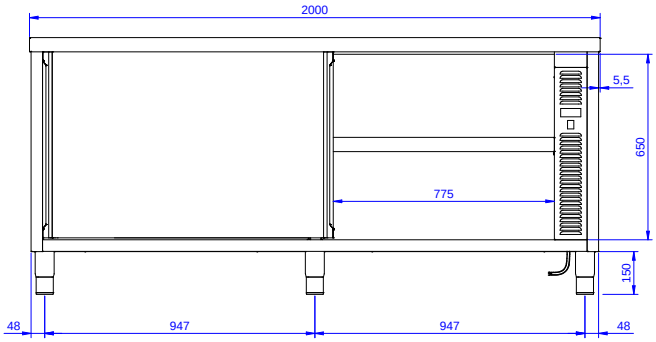

Side

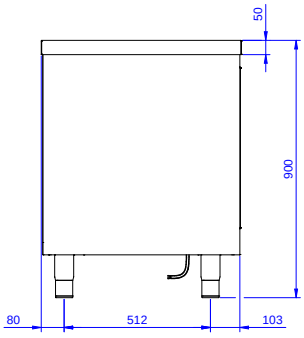

EI = Electrical inlet (power)

Top

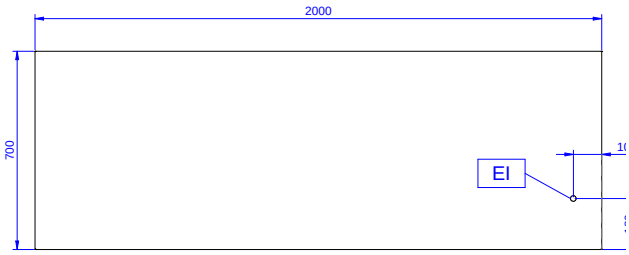

Electric

Supply voltage:	220-240 V/1N ph/50/60 Hz
Total Watts:	2.4 kW

Key Information:

Cabinet width:	1945 mm
Cabinet depth:	645 mm
Cabinet height:	610 mm
Cabinet temperature:	50-75 °C
External dimensions, Width:	2000 mm
External dimensions, Depth:	700 mm
External dimensions, Height:	900 mm
Number and type of doors:	2 Sliding
Worktop thickness:	50 mm
Net weight:	75 kg

The company reserves the right to make modifications to the products without prior notice. All information correct at time of printing.